# SPECIFICATION FOR APPROVAL
# 承 认 书

| | | |
|---|---|---|
| 客戶 / CUSTOMER | : | |
| 客戶型号 / CUSTOMER P/N | : | |
| 产品名称 / ITEM | : | AC 8槽LED镍氢镍镉电池充电器/AC 8 slots LED NI-MH/NI-CD battery charger |
| 产品种类 / DESCRIPTION | : | 槽充/slot charger |
| 本公司产品型号 / OUR MODEL NO. | : | CH-RMH242-01 |
| 标准 / STANDARD | : | |
| 額定 / RATING | : | I/P:AC 100V~240V 50HZ/60HZ |
| | | O/P: AA 1.2V-250mA |
| | : | O/P: AAA 1.2V-100mA |
| 备注 / REMARKS | | |

**注意:在贵司出单前,请确认签回以下项目/ Attention: Before placing orders, please confirm to sign back the followings:**

- ☐ **产品规格(首页) /Production Spec(Front Page)**
- ☐ **铭牌规格(如有) /Nameplate Spec(if any)**
- ☐ **包装规格(如有)/Packing Spec(if any)**

| 版本 REV | 描述/DESCRIPTION | 日期 DATE |
|---|---|---|
| A0 | 首版/FIRST EDITION | 2011-4-22 |
| A1 | 修改格式/CHANGE FORMAT | 2019-01-15 |
| | | |
| | | |

| 瑞鼎电子/ Ryder Electronics | |
|---|---|
| | 批准/Approved by |
| 签名 Signature | 衣绍鹏 |
| 日期/DATE | 2019-01-15 |

| 客户/ CUSTOMER |
|---|
| 确认 APPROVED BY |
| （签字或公司盖章） |
| 日期/DATE |

# 目　　录 Content


**1 产品特点：PRODUCT CHARACTERISTICS ..... 3**

**2 电气性能 ELECTRICAL CHARACTERISTICS ..... 3**

2.1 输入特性 INPUT CHARACTERISTICS ..... 3
2.2 输出特性 OUTPUT CHARACTERISTICS ..... 3

**3 电池放置及 LED 指示状态 BATTERY PLACING AND LED INDICATION ..... 4**

**4 符合安规标准 SAFETY REQUIREMENTS STANDARD ..... 4**

**5 适用环境 APPLICABLE ENVIRONMENTS ..... 4**

5.1 工作温度：WORKING TEMPERATURE ..... 4
5.2 工作湿度 WORKING HUMIDITY ..... 4
5.3 贮存温度 STORAGE TEMPERATURE ..... 4
5.4 存储湿度 STORAGE HUMIDITY ..... 4
5.5 大气压力 ATMOSPHERIC PRESSURE ..... 4

**6 安全要求 SAFETY REQUIREMENTS ..... 5**

6.1 抗电强度 ELECTRICAL RESISTANCE ..... 5

**7 机械 MECHANICS ..... 5**

7.1 外观图: APPEARANCE ..... 5
7.2 输入线材与 AC 头标准 INPUT CABLE AND AC PLUG STANDARD ..... 5
7.3 铭牌标贴 LABEL ..... 5

**8 可靠性能 RELIABLE PERFORMANCE ..... 6**

**9 外观要求 APPEARANCE REQUIREMENT ..... 7**

**10 体积与重量 VOLUME AND WEIGHT ..... 7**

10.1 体积 VOLUME ..... 7
10.2 重量 WEIGHT ..... 7

**11 抽样标准 SAMPLING STANDARD ..... 7**

**12 包装 PACKING ..... 8**

**13 使用注意事项 CAUTION ..... 8**

# 1 产品特点：Product characteristics

- 本充电器是一款 AA/AAA 镍氢电池专用标准充电器。It is a standard charger special for AA/AAA NI-MH battery.
- 适应 AA/AAA 镍氢电池充电；适合 500-2500mAh 的电池充电。It is suitable for AA/AAA NI-MH battery; it is suitable for 500-2500mAh battery.
- 充电时只需将 AA/AAA 镍氢电池放入充电器充电槽内，接入 AC 电源即可；使用非常方便。Convenience with AC connection and correct battery placing.
- 10 小时充电安全时间限制，确保使用安全。Limitation of 10 hours charging time for safety.
- 充电时红灯长亮，安全时间到时红灯熄灭,显示直观。Bicolor LED.
- 宽电压 AC 输入，100-240VAC 50/60Hz 适应全球。Input voltage: 100V-240V～ 50Hz/60Hz

注意：请不要拿本充电器充适应范围以外的其它电池及电池包，本规格书所提及的所有电池及均指 **AA/AAA** 镍氢电池。

Caution: this spec and charger are only suitable for AA/AAA NI-MH battery.

# 2 电气性能 Electrical characteristics

## 2.1 输入特性 Input characteristics

### 2.1.1输入电压 Input voltage

输入电压范围：input voltage range

100-240VAC 50/60Hz

### 2.1.2输入电流 Input current

额定工作电流：rated current ≤200mA

### 2.1.3浪涌电流：Surge current

浪涌电流：surge current

30A MAX

## 2.2 输出特性 Output characteristics

### 2.2.1输出充电电压范围 Output voltage range

输出充电电压范围： 1 – 1.6V（最大可充电电压范围）

Output voltage range: 1-1.6V (maximum chargeable voltage range)

### 2.2.2额定充电电流：(正常充电条件下) Rated charge current (normal condition)

AA 额定充电电流 ：250mA ±50mA ×8CH @CV=1.2V

AA rated charge current: 250mA±50mA ×8CH @CV=1.2V

AAA 额定充电电流 ：100mA ±50mA ×8CH @CV=1.2V

AAA rated charge current: 100mA±50mA ×8CH @CV=1.2V

### 2.2.3输出空载电压：Output no-load voltage

输出电压:output no-load voltage <9.0V

### 2.2.4充电方式 Charge method

采用恒流充电方式 Constant current charge method.

### 2.2.5输出短路电流 Output short circuit current

当输出端短路时，短路电流≤1A (输出端不可以长期短路，长期短路可能会损坏充电器。)

When there is an output short circuit, short circuit current is lower than or equal to 1A. (the output can’t stay in short circuit state for a long time or it may damage the charger.)

2.2.6输出反接保护 Battery reverse connection protection

当电池装反时,充电器不充电(结构防反接)

Charger has battery reverse connection protection (shell mechanism).

2.2.7反灌电流 Reverse current

充电器反灌电流：≤2mA，（当无市电输入时）

Reverse current ≤2mA (no AC input)

2.2.8停止充电的条件 Condition of stop charging

从接入 AC 电源时开始计时,10 小时±10%定时停止充电

10 ±10% hours charging time limitation since AC power connection.

2.2.9适用电池 Suitable battery

本充电器适用于 500-2500mA/H AA/AAA 镍氢电池。

This charger is suitable for 500-2500mAh AA/AAA NI-MH battery.

# 3 电池放置及 LED 指示状态 Battery placing and LED indication

| | |
|---|---|
| 未接电池 | 充电指示灯——不亮 |
| 充电状态 | 充电指示灯——红灯常亮 |
| 输出短路 | 充电指示灯——红灯常亮 |
| 定时停止充电状态 | 充电指示灯——不亮 |

| | |
|---|---|
| No battery | LED —— light off |
| Charging | LED —— red light |
| Output short circuit | LED —— red light |
| Stop charging when time setting is end | LED —— light off |

# 4 符合安规标准 Safety requirements standard

# 5 适用环境 Applicable environments

5.1工作温度：Working temperature

0~+40℃

5.2工作湿度 Working humidity

工作湿度：working humidity≤90% （不结露 no condensation）

5.3贮存温度 Storage temperature

-20~+80℃

5.4存储湿度 Storage humidity

相对湿度: relative humidity ≤85%

5.5大气压力 Atmospheric pressure

70~106KPa

# 6 安全要求 Safety requirements

## 6.1 抗电强度 Electrical Resistance

初次级抗电强度≥1500VAC 50HZ/60HZ 正弦波有效值一分钟无击穿、飞弧现象，漏电流≤10 mA

Primary electrical resistance ≥1500V AC 50HZ/60HZ sin wave RMS. No breakdown or arcing phenomenon in 1minute. Drain current ≤10 mA.

# 7 机械 Mechanics

## 7.1 外观图: Appearance

外壳颜色：实际外观颜色或印字内容按客户订制

The appearance and print can be customized

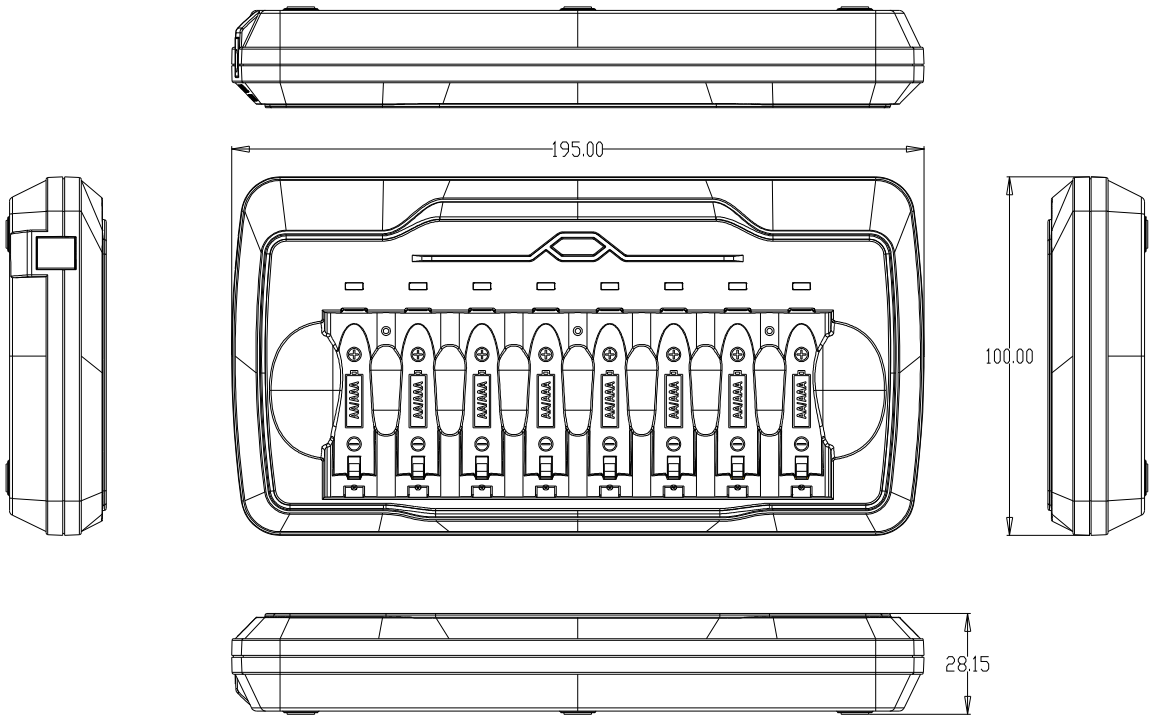


## 7.2 输入线材与 AC 头标准 Input cable and AC plug standard

具体内容按客户要求订制

Input cable and AC plug standard can be customized.

## 7.3 铭牌标贴 Label

具体内容按客户要求订制

Label can be customized.

## 8 可靠性能 Reliable Performance

- 高温试验：实验温度为 65℃ ±2℃，产品不包装，持续时间为 5 小时。在常温下放置待恢复后对其外观、绝缘强度、指示功能及电气性能进行重新测试。外观应平整无划痕、毛刺以及其它机械损伤，外露金属部分不应有锈蚀；绝缘测试无击穿、飞弧现象；成品电性能正常；LED 指示功能正常。

  High temperature test: under 65℃ ±2℃，the charger without packing, last for 5 hours. Then take it into the room temperature, test its appearance, LED and electrical specification. The appearance should have no scratches, burrs and other mechanical damage, metal parts rust should have no corrosion. Insulation test has no breakdown or arcing phenomenon .LED indication function and electrical performance works normally
- 低温试验：实验温度为 －20℃ ±3℃，产品不包装，持续时间为 8 小时。在常温下放置待恢复后对其外观、绝缘强度、指示功能及电性能进行重新测试。外观应平整无划痕、毛刺以及其它机械损伤，外露金属部分不应有锈蚀；绝缘测试无击穿、飞弧现象；成品电性能正常；LED 指示功能正常。

  Low temperature test: under－20℃ ±3℃，the charger without packing, last for 8 hours. Then take it into the room temperature, test its appearance, LED and electrical specification. The appearance should have no scratches, burrs and other mechanical damage, metal parts rust should have no corrosion. Insulation test has no breakdown or arcing phenomenon. LED indication function and electrical performance works normally
- 恒定湿热试验：实验温度为 40℃ ±2℃，湿度为 90%～95%，产品不包装，持续时间为 48 小时。测试后对其外观、绝缘强度、指示功能及电性能进行重新测试。外观应平整无划痕、毛刺以及其它机械损伤，外露金属部分不应有锈蚀；绝缘测试无击穿、飞弧现象；成品电性能正常；LED 指示功能正常。

  The constant humidity and heat test: under 40℃ ±2℃，humidity 90%～95%，the charger without packing, last for 48 hour. Then test its appearance, LED and electrical specification. The appearance should have no scratches, burrs and other mechanical damage, metal parts rust should have no corrosion. Insulation test has no breakdown or arcing phenomenon. LED indication function and electrical performance works normally
- 振动试验：频率为 10～55HZ，振幅为 0.35mm，每个方向上扫频循环次数为 10 次。实验后对其外观、绝缘强度、指示功能及电性能进行重新测试。外观应平整无划痕、毛刺以及其它机械损伤，外露金属部分不应有锈蚀；绝缘测试无击穿、飞弧现象；成品电性能正常；LED 指示功能正常。

  Vibration test: 10～55HZ，amplitude 0.35mm，Sweep cycles in each direction 10 times. Then test its appearance, LED and electrical specification. The appearance should have no

scratches, burrs and other mechanical damage, metal parts rust should have no corrosion. Insulation test has no breakdown or arcing phenomenon. LED indication function and electrical performance works normally

- 跌落试验：高度为 1 米，实验台厚度为 20mm 的硬木板，6 个表面，每个方向 1 次。实验后对其外观、绝缘强度、指示功能及电性能进行重新测试，外观应无机械破损，外露金属部分不应有锈蚀；绝缘测试无击穿、飞弧现象；成品电性能正常；LED 指示功能正常；成品内部应无异响。

  Drop test: from 1M, the test platform is the hardboard with 20mm thickness. 6 surface, once in each direction. Then test its appearance, Dielectric strength, LED and electrical specification. The appearance should have no damage, no abnormal noise inside; metal parts rust should have no corrosion. Insulation test has no breakdown or arcing phenomenon. LED indication function and electrical performance works normally. The product has no abnormal sounds

## 9 外观要求 Appearance Requirement

充电器外壳表面平整无划痕，毛刺及其它机械损伤，丝印完整清晰，外露金属部份无锈蚀。

Charger case should be smooth and have no scratches, burrs and other mechanical damage, complete and clear screen, the exposed metal parts no rust.

## 10 体积与重量 Volume and Weight

### 10.1体积 Volume

L 195* W 100* H 28.15 $mm^3$

### 10.2重量 Weight

net：261g

## 11 抽样标准 Sampling standard

产品抽样检验参照 MIL-STD-105E 标准制定满足本公司产品品质检验之抽样计划，并严格督导实施。当客户或合同有特殊要求时。可按客户和合同要求执行。

Product sampling reference MIL-STD-105E standards to meet the company's products quality inspection of the sampling plan, and implement strict supervision. Also can be based on the customer’s requirement.

## 12 包装 Packing

产品配套白盒/彩盒包装，具体包装方式可按客户要求订制

White box and colorful box packing. Packing can be customized.

## 13 使用注意事项 Caution

1. 不可以拿本充电器充适应范围以外的电池。

   Only suitable for AA/AAA NI-MH battery..

2. 不可在超过 40℃环境使用本充电器对电池充电；建议在 35℃以下的环境下充电，电池在充足的时候有轻微的发热，属正常现象，请放心使用。

   Do not use the charger to charge when temperature is over 40℃. temperature below 35℃ is recommended. It is normal that there is some heat when battery was fully charged.

3. 充电时请远离热源和火源。

   Far away from heat and fire.

4. 请勿在酸、碱、和有腐蚀的环境中使用本充电器及电池。

   Do not use the charger under the environment of acids, alkalis, and corrosion.

5. 请勿将充电器进水或淋雨，以免引起安全问题。

   Do not place the charger into rain or water, or may cause problems.

6. 请勿自行拆开充电器和电池，以免发生危险。

   Do not disassemble charger and battery , to avoid danger.

7. 不得让小孩单独使用本充电器。

   Do not let children use the charger alone. Please place the charger out of reach of children